Chatillon
force measurement
AMETEK

External Transducers for the DFS3

AFM-External Force Loadcell
AQM-External Torque Transducer

AFM and AQM External Sensors

Chatillon force measurement AMETEK

Versatility and Simplification

The external sensors: **AFM** external load cell, and the **AQM** external torque transducer, can be used together with our force gauge **DFS3** to offer ultimate flexibility when performing different types of tests in various applications without having to constantly change settings. All settings can be preconfigured so that the sensors are ready for use, and this especially increases the effciency when doing repeated testing day-after-day.

Up to two external sensors can be connected in the **DFS3** force gauges. Together with the internal sensor., the full set-up provides a 3-in-1 device. The force gauge shows the results from one sensor at a time, so that there is no doubt as to which sensor the results come from.

It is easy to connect the two external sensors - they both have an ADC inline box, which ensures a stable digital signal and enables the force gauge itself to identify them with a single click. The digital communication offers an improved accuracy and keeps the calibration information stored within the external device, meaning it can be used by other **DFS3** gauges without affecting readings. This makes it plug-and-play.

External loadcells AFM

Capacities from 0.5lbf to 1000lbf (2.5N to 5000N)

Accuracy: 0.1% FS

** Sensors presented with a **DFS3-025***

External Torque Transducers AQM

Capacities from 3in-lbf to 200in-lbf (0.35 Nm to 20 Nm)

Accuracy: 0.3% FS

AFM & AQM with the DFS3

Chatillon force measurement AMETEK

Unique User Interface

The **AFM** and **AQM** sensors are automatically recognized by the **DFS3** force gauge. The integrated electronics associated with the sensors contain all the calibration parameters necessary to guarantee the best measurement precision and metrological monitoring. In addition, potential overloads, dates, and values are also stored in memory and displayed.

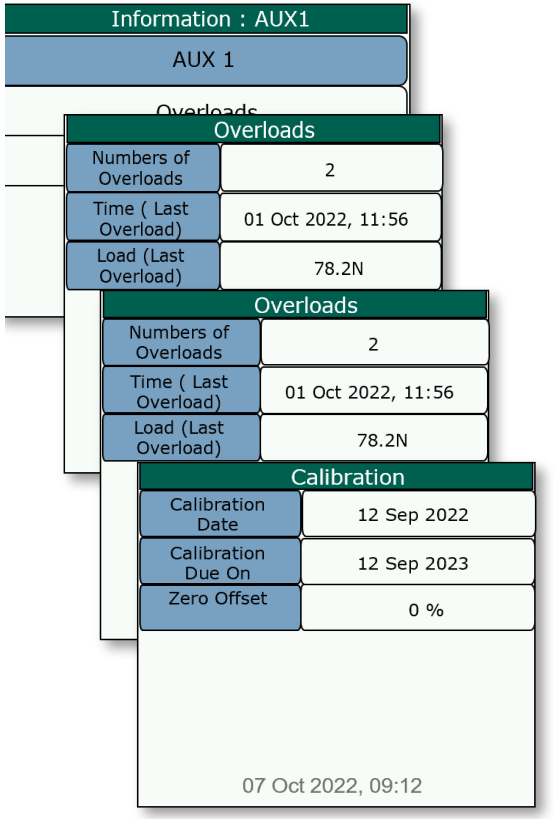

Always up to speed

With the **DFS3** you are always sure to have the latest firmware on your device. Our cloud-based software AMETEK **Device Agent** helps you identify the latest firmware and get it updated in only 60 sec.

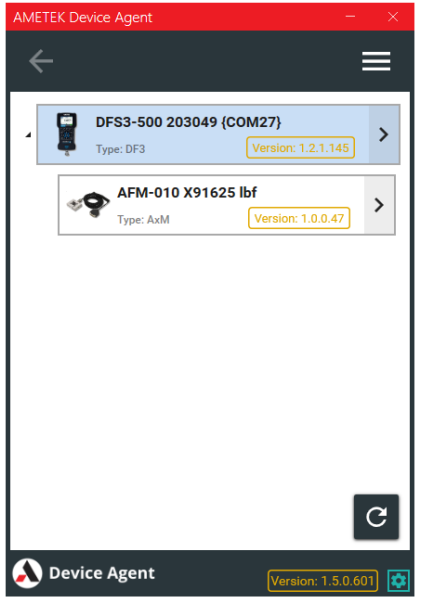

Versatility and Flexibility

All the **DFS3s** have an internal Loadcell and TWO external transducer inputs. A Test Station could be configured and set up with 3 transducers.

The **DFS3** manages and interfaces with one sensor at a time.

With FIVE Test Setups available, you can pre-configure your tests with the required transducer. This simplifies and improves the quality and reliability of your measurements.

Fast and intuitive!

AMETEK SENSORS, TEST & CALIBRATION

AFM with the motorized TCM

Chatillon force measurement AMETEK

Get greater flexibility in application solutions

To benefit from a more stable and reliable test speed, the external **AFM** loadcells can be combined with a **TCM** Motorized Test Stand. This helps to eliminate any variables that might impact the force readings and offers an ideal solution for force measurement testing. The **TCM** series is well adapted for production environments and attached with the **DFS3** digital force gauges makes tensile, compression, peel, and flexural testing of your samples an easy task.

In this solution, you get a powerful stand-alone solution for product testing, where the **DFS3** force gauge can display the **TCM** travel for easy positioning of the moving crosshead. The **TCM** will stop at break or stop at the limit set on the gauge. This solution is also ideal where repeated measurements are required. Here, the **TCM** series will ensure that the test is carried out in exactly the same way every time, thus making data collection easier and more comparable.

Benefits with the ForceTest software

Adding the Chatillon **ForceTest** software will power up your **TCM** Series force testing solution and will turn your analysis into a fast and simple process. By combining the **DFS3** force gauge and the **ForceTest** software with the **TCM** Series you obtain:

- Unique solution with powerful and modern UI in **ForceTest** software
- Plotting of Force (**DFS3**)
- Setups for Force (Tension or Compression) Torque, Friction and Peel
- Library of results and calculations (**ForceTest**):
  - Peak (T & C)
  - Maximum; Minimum; Average for complete test or, on a specific area of research
  - Friction test setup with COF results
  - Peeling test setup with peeling resistance results
  - Selectable Break detection for either software or DF3 readings
  - Torque test setup
  - Adjustable data rate
  - Live graph with autoscaling
  - Statistics
  - Export to XLS or CSV and PDF report
  - Report Designer
  - Validation mode for importing known data set in CSV format. Useful in IQ/OQ installation process

AFM Loadcells

The Chatillon® **AFM** series Loadcells are designed to operate in both tension and compression using strain gauge technology. In combination with a **DFS3** force gauge, the **AFM** loadcells offer an ideal solution for applications that require a measurement where there is no room for the gauge or to gain further flexibility. The gauge may be handheld or remotely mounted and the loadcell may be placed right where it needs to be to take the reading. A straight cable with a length of app. 9ft (2.8M) allows the **AFM** transducers to be used in diverse remote configurations.

The gauge will operate the same as if it were an integral load cell and all functions will operate normally

Accuracy better than 0.1% of full scale is now possible for all detachable **AFM** Loadcells. All **AFM** Loadcells are calibrated in tensile and compression with a measurement readout and tabulated on the NIST calibration certificate.

*Loadcell **AFM-025**, 25lbf (100N)*

*Loadcell **AFM-200,** 200lbf (1000N)*

Note: ideally when measuring Force, the Loadcell should be placed so that the force always passes through its center while minimizing lateral forces.
Important: The requirements to accomplish this are for the load applied centrally while keeping the best possible rigid bearing surface.

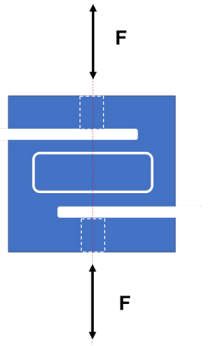

AFM Loadcells

Chatillon force measurement AMETEK

Model & Capacity

Model		Lbf	N	kgf	gf	Ozf	Strain
AFM-250G	Capacity	0.500000	2.5000	0.25000	250.00	8.0000	0.33
	Resolution	0.00001	0.0001	0.0001	0.01	0.0001	
AFM-002	Capacity	2.0000	10.0000	1.00000	1000.00	32.000	0.33
	Resolution	0.0001	0.0001	0.00001	0.01	0.001	
AFM-010	Capacity	10.0000	50.000	5.0000	5000.0	160.00	0.33
	Resolution	0.001	0.001	0.0001	0.1	0.01	
AFM-025	Capacity	25.000	100.000	10.0000	10000.0	400.00	0.38
	Resolution	0.001	0.001	0.0001	0.1	0.01	
AFM-050	Capacity	50.000	250.00	25.000	25000	800.00	0.15
	Resolution	0.001	0.01	0.001	1	0.01	
AFM-100	Capacity	100.000	500.00	50.000	50000	1600.00	0.20
	Resolution	0.01	0.01	0.001	1	0.1	
AFM-200	Capacity	200.00	1000.00	100.000	-	-	0.20
	Resolution	0.01	0.01	0.001	-	-	
AFM-500	Capacity	500.00	2500.0	250.00	-	-	0.20
	Resolution	0.01	0.1	0.01	-	-	
AFM-1000	Capacity	1000.00	5000.0	500.00	-	-	0.30
	Resolution	0.01	0.1	0.01	-	-	

Calibration Certificate for AFM Loadcells

The calibration of the **AFM** Loadcells is carried out with the greatest care by our metrology experts. All our **AFMs** are delivered with a calibration certificate and a statement of Tensile and Compressive measurements.

Chatillon force measurement

AMETEK
8600 Somerset Drive
Largo, FL 33773
(727) 536-7831

CERTIFICATE OF CALIBRATION # WS2 37129

CUSTOMER:

ADDRESS:

CITY/STATE:

TRACEABILITY STATEMENT

TRACEABILITY AS DEFINED BY THIS CERTIFICATE IS TO AN AMETEK TEST AND CALIBRATION INSTRUMENTS DIVISION LABORATORY REFERENCE STANDARD, OR STANDARDS. SAID STANDARDS ARE ULTIMATELY TRACEABLE BY MEANS OF AN UNBROKEN CHAIN OF CALIBRATIONS TO THE INTERNATIONAL SYSTEM OF UNITS (SI -SYSTEME INTERNATIONAL D'UNITES) THROUGH AN ACCREDITED NATIONAL METROLOGY INSTITUTE (SUCH AS NIST, PTB/DKD, BNM, LNE, IGMC, DTI, CENAM, ETC), OR BY REFERENCE TO A NATURAL PHYSICAL CONSTANT ACCEPTED BY CGPM AND CIPM. AMETEK CALIBRATION NORMS ARE IN ACCORDANCE WITH THE BASIC REQUIREMENTS OF ISO 10012 AND ANSI Z540-1.

MODEL: DFS3-050 SERIAL NUMBER: 117106

CALIBRATION PROCEDURE: MGFP-178 DATE CERTIFIED: 1/14/2022

PRODUCT SPECIFICATION

CAPACITY: 50 LBF X 0.001 LBF ACCURACY LIMITS: +/-0.10% OF FULL SCALE

CONDITION: New PAGE 1 OF 2

AFM Loadcells

Chatillon force measurement AMETEK

Model and Characteristics

Accuracy:	±0.1% of Full Scale
Tare Capacity:	110% of Rated Capacity
Maximum Overload:	150% of Rated Capacity
Resolution:	Up to 100,000 points of resolution
	(Adjustable depending on Capacity & Units)
Peak:	1 kHz
Sampling:	4 kHz
Connection thread size (up to 25lbf, 100N):	Male - #10-32
Connection thread size (50 to 200lbf, 250 to1000 N):	Female - 1/4 -28 UNF
Connection thread size (500lbf, 2500 N):	Female - 1/2-20 UNF
Operating Temperature:	40°F to 110°F (5°C to 45°C)
Instrument Weight:	1.1 lbs (0.5 kg)
Shipping Weight:	4 lbs (2 kg)
Warranty:	2 Years

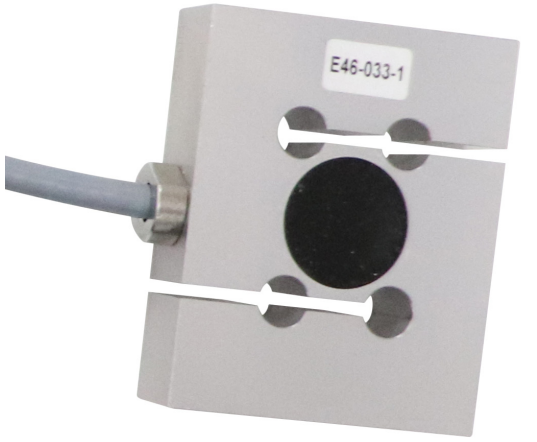

Accessories (Included with AFM Loadcells)

AFM-250G	AFM-010	SPK-FMG-12A... Hook
AFM-002	AFM-025	SPK-FMG-11A... Flat Adapter
AFM-050		SPK-FMG-12C... Hook
AFM-100		SPK-FMG-11B... Flat Adapter
AFM-200		SPK-DFS-R-139. Thread Adapter 1/4-28M to 5/16-18M
AFM-500		SPK-FMG-12C... Hook
AFM-1000		SPK-FMG-11B... Flat Adapter
		13048 ..... Thread Adapter 1/4-28F to 5/16-18F
		17162 ..... Thread Adapter 5/16-18M to 1/2-20M

AFM Loadcells

Chatillon force measurement AMETEK

Dimensions

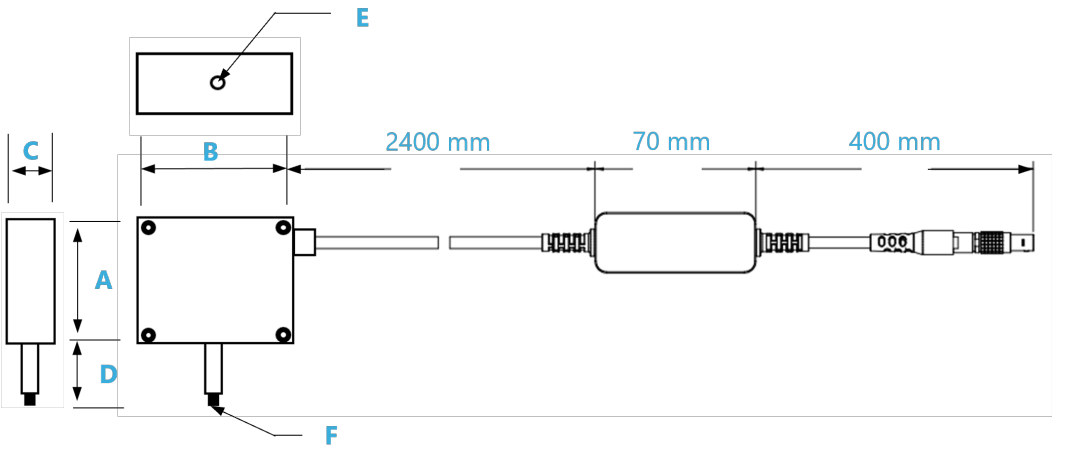

Model	A in / mm	B in / mm	C in / mm	D in / mm	E	F
AFM-250G	1.50 38.1	2.00 50.8	0.75 19	0.75 19	#10-32F	#10-32 M
AFM-002	1.50 38.1	2.00 50.8	0.75 19	0.75 19	#10-32 F	#10-32 M
AFM-010	1.5 38.1	2.00 50.8	0.75 19	0.75 19	#10-32 F	#10-32 M
AFM-025	1.50 38.1	2.00 50.8	0.75 19	0.75 19	#10-32 F	#10-32 M

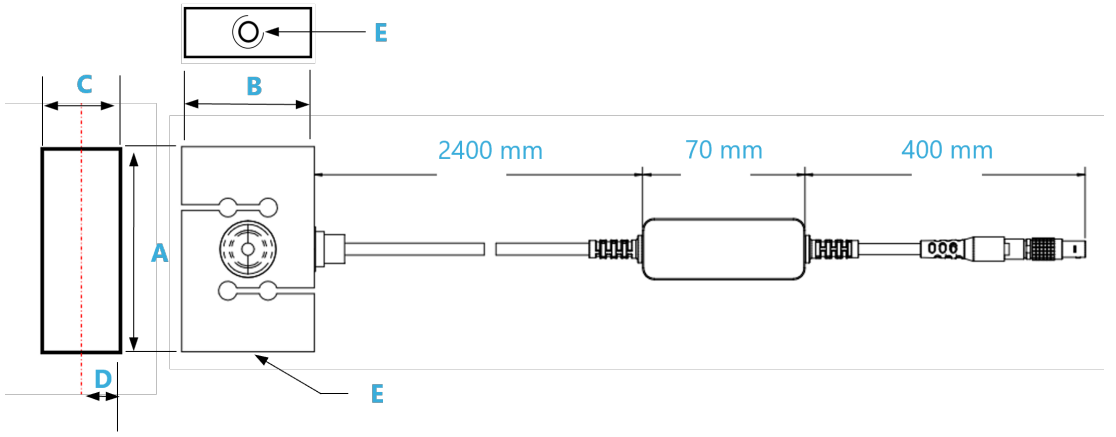

Model	A in / mm	B in / mm	C in / mm	D in / mm	E
AFM-050	2.48 63.0	2.00 50.8	0.61 15	0.305 7.75	1/4 – 28 F
AFM-100	2.48 63.0	2.00 50.8	0.61 15	0.305 7.75	1/4 – 28 F
AFM-200	2.48 63.0	2.00 50.8	0.61 15	0.305 7.75	1/4 – 28 F
AFM-500	2.98 75.7	2.00 50.8	0.98 25	0.490 12.5	1/2 – 20 F
AFM-1000	2.98 75.7	2.50 63.5	0.98 25	0.490 12.5	1/2 – 20 F

Torque Transducers AQM

When combined with the **DFS3**, these rugged and accurate sensors turn your force gauge into a torque measurement device: no need to purchase another gauge. As is the case with the dedicated loadcells, the gauge may be handheld or used in diverse remote configurations with the straight cable of app. 9ft (2.8M) .

This configuration also offers the flexibility of having both a force and a torque measurement in a single gauge. This is the unit to select for maximum flexibility: one unit and interchangeable sensors can do it all. The gauge will operate the same as if it were an integral loadcell and all functions will operate normally.

The Chatillon® **AQM** series Torque Transducers are designed to operate in both clockwise and counterclockwise directions using strain gauge technology and an accuracy better than 0.3% of full scale is now possible for all detachable **AQM** Torque Transducers. All **AQM** Torque Transducers are calibrated in both clockwise and counterclockwise directions tabulated on the NIST calibration certificate.

Note: Ideally when measuring Torque, the Torque Transducer should be placed so that the torque loads always passes through its center while minimizing lateral forces.

Important: The requirements to accomplish this are for the Torque to be applied centrally while keeping the best possible rigid retaining surface.

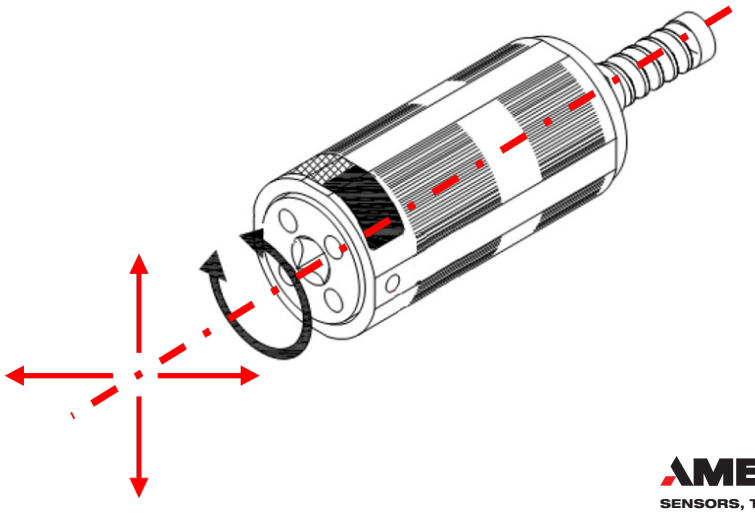

Torque Transducers AQM

Chatillon force measurement AMETEK

Model & Capacity

Model		Lbf.in	N.cm	kg.cm	g.cm	N.m	Oz.in	Torsion
AQM-0003	Capacity	3.0000	35.000	3.5000	3500.0	0.35000	50.000	3°
	Resolution	0.0001	0.001	0.0001	0.1	0.00001	0.001	3°
AQM-0012	Capacity	12.0000	125.000	12.5	12500	1.25000	192.00	3°
	Resolution	0.0001	0.001	0.0001	0.1	0.00001	0.01	3°
AQM-0050	Capacity	50.000	500.00	50.000	50000	5.0000	800.00	3°
	Resolution	0.001	0.01	0.001	1	0.0001	0.01	3°
AQM-0100	Capacity	100.000	1000.00	100.000	100000	10.0000	1600.0	3°
	Resolution	0.001	0.01	0.001	1	0.0001	0.1	3°
AQM-0200	Capacity	200.00	2000.0	200.00	200000	20.000	3200.0	3°
	Resolution	0.01	0.1	0.01	10	0.001	0.1	3°

AQM torque transducers are supplied with a gripping chuck.
The chuck is inserted into the **AQM** via a 9.5mm square tip, which is removable and lockable.
This chuck can therefore be replaced by other gripping mechanisms for different product types such as corks or bottle caps.

Calibration Certificate for AQM Torque Transducers

The calibration of the **AQM** Torque Transducer is carried out with the greatest care by our metrology experts. All our **AQMs** are delivered with a calibration certificate and a statement of Clockwise and Counterclockwise Torque measurements.

Chatillon force measurement

AMETEK
8600 Somerset Drive
Largo, FL 33773
(727) 536-7831

CERTIFICATE OF CALIBRATION # WS2 37129

CUSTOMER:

ADDRESS:

CITY/STATE:

TRACEABILITY STATEMENT

TRACEABILITY AS DEFINED BY THIS CERTIFICATE IS TO AN AMETEK TEST AND CALIBRATION INSTRUMENTS DIVISION LABORATORY REFERENCE STANDARD, OR STANDARDS. SAID STANDARDS ARE ULTIMATELY TRACEABLE BY MEANS OF AN UNBROKEN CHAIN OF CALIBRATIONS TO THE INTERNATIONAL SYSTEM OF UNITS (SI -SYSTEME INTERNATIONAL D'UNITES) THROUGH AN ACCREDITED NATIONAL METROLOGY INSTITUTE (SUCH AS NIST, PTB/DKD, BNM, LNE, IGMC, DTI, CENAM, ETC), OR BY REFERENCE TO A NATURAL PHYSICAL CONSTANT ACCEPTED BY CGPM AND CIPM. AMETEK CALIBRATION NORMS ARE IN ACCORDANCE WITH THE BASIC REQUIREMENTS OF ISO 10012 AND ANSI Z540-1.

MODEL: DFS3-050 SERIAL NUMBER: 117506

CALIBRATION PROCEDURE: MGFP-178 DATE CERTIFIED: 1/14/2022

PRODUCT SPECIFICATION

CAPACITY: 50 LBF X 0.001 LBF ACCURACY LIMITS: +/-0.10% OF FULL SCALE

CONDITION: New PAGE 1 OF 2

Torque Transducers AQM

Chatillon force measurement AMETEK

Model and Characteristics

Accuracy:	±0.3% of Full Scale
Tare Capacity:	10% of Rated Capacity
Maximum Overload:	150% of Rated Capacity
Resolution:	Up to 100,000 points of resolution (adjustable depending on Capacity & Units)
Peak:	1 kHz
Sampling:	4 kHz
Display:	10 Hz
Socket Adapter:	3/8" (9.5mm) Square Female
Mandrel Max Opening (**AQM-0003**):	0.06 to 0.40" (1.6 to 10mm)
Mandrel Max Opening (**AQM-0012** to **AQM-0200**):	0.08 to 0.51" (2 to 13mm)
Operating Temperature:	40°F to 110°F (5°C to 45°C)
Instrument Weight:	1.1 lbs (0.5 kg)
Shipping Weight:	4 lbs (2 kg)
Warranty:	2 Years

Accessories (Included with **AFM** Loadcells)

AQM-0003 ; AQM-0012
Socket Bit & Jacobs tightening key

SPK-DTG-037.. 1/4"(6.35mm) square to Hex

AQM-0050 ; AQM-0100
Socket Bit & Jacobs tightening key

SPK-DTG-039.. 1/2"(12.70mm) square to Hex

Torque Transducers AQM

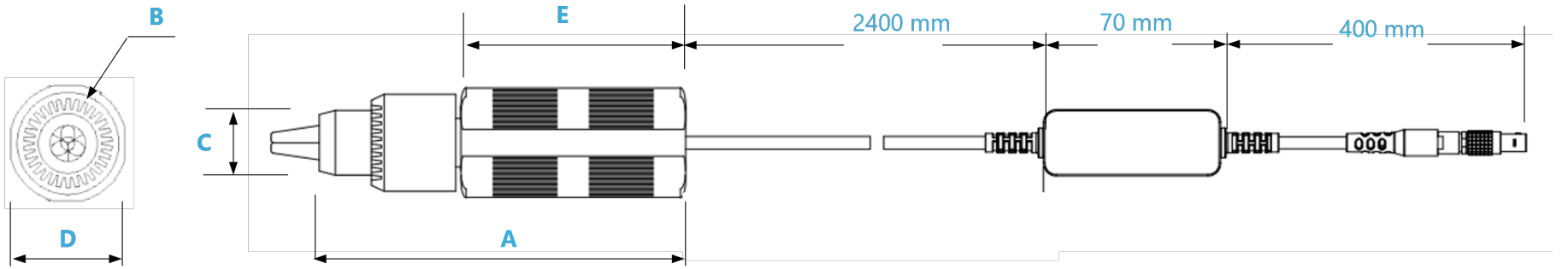

Model	A in / mm	B in / mm	C in / mm	D in / mm	E in / mm	Mandrel Opening in / mm
AQM-0003	5.62 143	1.25 31.8	1.00 25.4	1.69 42.9	3.68 93.5	0.06 to 0.63
AQM-0012	6.00 152	1.62 41.1	1.20 30.5	1.69 42.9	3.68 93.5	0.08 to 0.51 2 to 13
AQM-0050	6.00 152	1.62 41.1	1.20 30.5	1.69 42.9	3.68 93.5	0.08 to 0.51 2 to 13
AQM-0100	6.00 152	1.62 41.1	1.20 30.5	1.69 42.9	3.68 93.5	0.08 to 0.51 2 to 13
AQM-0200	6.00 152	1.62 41.1	1.20 30.5	1.69 42.9	3.68 93.5	0.08 to 0.51 2 to 13

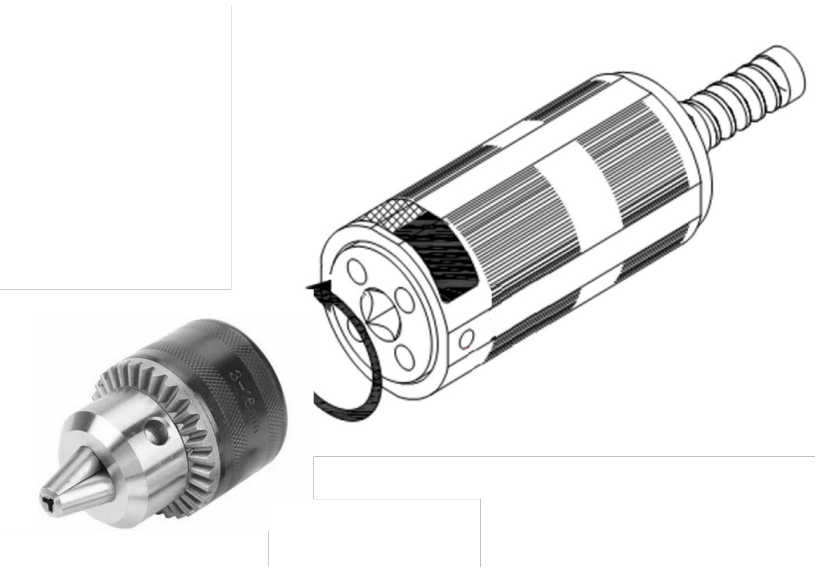

The Mandrel is detachable to allow custom adapters and fixtures to be mounted.

Ordering the AFM with the TCM

Chatillon force measurement AMETEK

AFM Loadcells mounted onto motorized single column TCM

AFM Force transducers can be mounted onto the motorized **TCM** cross-head. It is necessary to use a **DFS3** to manage and display the force values of the **AFM** and also read the displacement position of the **TCM** on the **DFS3**. An **AFM** transducer mounting kit **SPK-TCM-004** for the **TCM** is available. Also, as shown in the photo on the right, there are quick tooling attachment systems for **AFM** transducer. Depending on the capacity of the Loadcell, anchor kits are available as; SPK-TCM-001, SPK-TLC-002, SPK-TLC-003.

SPK-TCM-001

NC003254A...Adaptor #10-32 / 5/16
NC003255A...Adaptor #5/16 / 5/16
NC003237.....Locking Nut
NC003140..... Locking Nut
NC000612.....Aluminum Pin
NC003236.....Eye-End 5/8" aluminum

Thread Size #10-32

Used with **AFM-010*** to **AFM-025**.

SPK-TLC-002

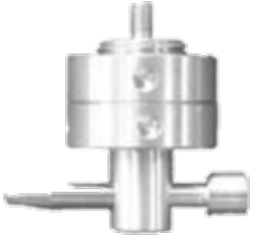

NC003137..... Eye-End 5/8" to 1/4 – 28M
NC003131 ..... Steel Locking Nut (2)
NC000612 ..... Steel Pin

Thread Size 1/4 - 28

Used with **AFM-050** to **AFM-200.**

SPK-TLC-003

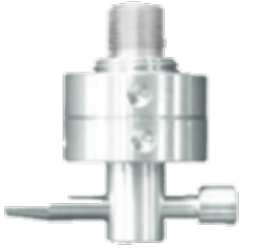

NC003138..... Eye-End 5/8" to 1/2 – 20M
NC003131 ..... Steel Locking Nut (2)
NC000612 ..... Steel Pin

Thread Size 1/2 – 20

Used with **AFM-500.**

TCM350-B * with **DFS3-100-AFM200**

Eye-End kit SPK-TLC-002 with Vise Grips TGX240k

** The Loadcells **AFM-250G** and **AFM-002** will not support the adapters due to their low capacities.*

** The lower 5/8" Eye-End adapter is included with the **TCM350**.*

AMETEK SENSORS, TEST & CALIBRATION

USA, Florida
Tel +1 (800) 527 9999
test.sales@ametek.com

India
Tel +91 22 2836 4750
test.sales@ametek.com

Singapore
Tel +65 6484 2388
test.sales@ametek.com

China, Shanghai
Tel +86 21 5886 5111
test.sales@ametek.com

China, Beijing
Tel +86 21 8526 2111-19
test.sales@ametek.com

United Kingdom
Tel +44 (0) 1243 833 370
test.sales@ametek.com

France
Tel +33 (0) 30 68 89 40
general.lloyd-instruments@ametek.fr

Germany
Tel +49 (0) 2159 9136 510
info.mct-de@ametek.de

Denmark
Tel +45 4816 8000
test.sales@ametek.com

SS-DFS3 ISSUE 2111

For detailed specifications go to the Data Sheet at ametektest.com

No part of this document may be reproduced or modified in any form or by any means, electronic or mechanical, without express written permission from AMETEK STC.

©2021 AMETEK Incorporated

Chatillon® force measurement

AMETEK®